# Pneumatically operated 2-Way 3-piece Stainless Steel ball valve

# P8715

## P8715

Solid, pneumatically operated 2-Way 3-piece Stainless Steel ball valve with airpower actuator in double acting and single acting version.

**SIZE**
DN08 (1/4") to DN100 (4")

**CONNECTION**
- 2-Sided female thread according to DIN 2999, DIN 259
- Mounting flange according to ISO 5211

**NOMINAL PRESSURE**
Maximum PN63

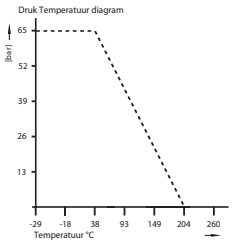


**TEMPERATURE RANGE**
From -25° to +180°C

**MATERIALS**
Body: stainless steel DIN 1.4408 (CF8M)
Ball: stainless steel AISI 316
Ball seal: PTFE 15% glass fiber reinforced
Shaft: Stainless steel AISI 316
Shaft sealing: PTFE 15% glass fiber reinforced
O-ring: FPM
Packed gland PTFE

**FLOW DIRECTION**
Random

**MOUNTING POSITION**
See mounting refererence for industrial valves.

**MEDIUM**
Neutral gases and liquids. For applications with aggressive media consult resistance table. Certain media may increase the torque.

**OPERATION (Standard)**
With pneumatic actuator double acting or single acting (spring closing "NC" or spring opening "NO") version.

**CONTROL MEDIUM**
Compressed air or inert gases according PNEUROP/ISO class 4, other control medium on request.

**CONTROL PRESSURE**
- 5,5 bar, other control pressure on request.

**OPTIONS AND ACCESSORIES**
Mechanical or inductive limit switches mounted in a switch box or single mounted on the actuator.

© aim fluid control b.v. Wijzigingen voorbehouden. 2019-02-28

aim fluid control b.v. Ekkersrijt 7310 NL-5692 HH Son en Breugel
Telefoon: +31 (0)499 49 10 90 Fax: +31 (0)499 49 63 70
email: info@aimfluid.nl www.aimfluid.nl

# Pneumatically operated
# 2-Way 3-piece
# Stailless Steel ball valve

# P8715

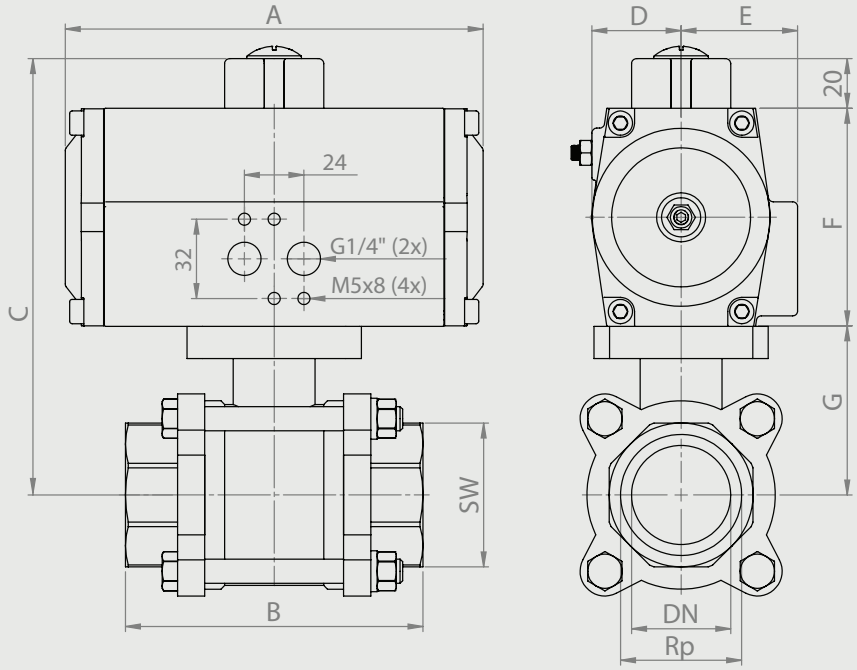


**Double-acting ball valve with pipe threads**

| Nominal[mm] connection[mm] | | max. press. [bar] | M(1) +30% [Nm] | Flange | Squa-re | Kv [m3/h] | Pneumatic Actuator | Dimension [mm] and weight [kg] | | | | | | | | Order Code |
|---|---|---|---|---|---|---|---|---|---|---|---|---|---|---|---|---|
| DN | Rp | PN | | | | | | A | B | C | D | E | F | G | Weight | |
| 8 | G1/4 | 63 | 4 | F03 | 9 | 6 | APD050 | 147 | 50 | 133 | 29,5 | 41,5 | 74 | 39 | 1,79 | 3P87150005 |
| 10 | G3/8 | 63 | 4 | F03 | 9 | 10 | APD050 | 147 | 50 | 133 | 29,5 | 41,5 | 74 | 39 | 1,78 | 3P87150010 |
| 15 | G1/2 | 63 | 5 | F04 | 9 | 24 | APD050 | 147 | 55 | 134 | 29,5 | 41,5 | 74 | 40 | 1,84 | 3P87150015 |
| 20 | G3/4 | 63 | 8 | F04/F05 | 11 | 43 | APD050 | 147 | 70,5 | 138 | 29,5 | 41,5 | 74 | 44 | 2,22 | 3P87150020 |
| 25 | G1 | 63 | 10 | F04/F05 | 11 | 83 | APD050 | 147 | 83 | 140 | 29,5 | 41,5 | 74 | 46 | 2,42 | 3P87150025 |
| 32 | G1.1/4 | 63 | 14 | F05/F07 | 14 | 130 | APD050 | 147 | 91 | 150 | 29,5 | 41,5 | 74 | 56 | 3,19 | 3P87150030 |
| 40 | G1.1/2 | 63 | 22 | F05/F07 | 14 | 205 | APD050 | 147 | 103 | 156 | 29,5 | 41,5 | 74 | 62 | 3,86 | 3P87150035 |
| 50 | G2 | 63 | 30 | F05/F07 | 14 | 340 | APD060 | 168 | 120 | 178 | 36,0 | 47,0 | 88 | 70 | 5,57 | 3P87150040 |
| 65 | G2.1/2 | 63 | 36 | F07/F10 | 17 | 520 | APD080 | 204 | 155 | 239 | 45,0 | 56,0 | 109 | 110 | 11,80 | 3P87150045 |
| 80 | G3 | 63 | 60 | F07/F10 | 17 | 1100 | APD090 | 262 | 182 | 250 | 52,0 | 55,0 | 120 | 110 | 17,40 | 3P87150050 |
| 100 | G4 | 63 | 95 | F07/F10 | 17 | 1820 | APD110 | 268 | 225 | 273 | 57,5 | 64,0 | 133 | 120 | 27,55 | 3P87150055 |

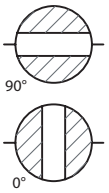


© aim fluid control b.v. Wijzigingen voorbehouden. 2019-02-28

aim fluid control b.v. Ekkersrijt 7310 NL-5692 HH Son en Breugel
Telefoon: +31 (0)499 49 10 90 Fax: +31 (0)499 49 63 70
email: info@aimfluid.nl www.aimfluid.nl

# Pneumatically operated
# 2-Way 3-piece
# Stailless Steel ball valve

# P8715

## Single-acting ball valve with pipe threads, NC

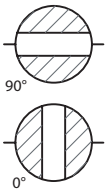


| Nominal[mm] connection[mm] | | max. press. [bar] | M(1) +30% [Nm] | Flange | Square | Kv [m3/h] | Pneumatic Actuator | Dimension [mm] and weight [kg] | | | | | | | | Order Code |
|---|---|---|---|---|---|---|---|---|---|---|---|---|---|---|---|---|
| DN | Rp | PN | | | | | | A | B | C | D | E | F | G | Weight | |
| 8 | G1/4 | 63 | 4 | F03 | 9 | 6 | APS050 | 147 | 50 | 133 | 29,5 | 41,5 | 74 | 39 | 1,89 | 3P87150105 |
| 10 | G3/8 | 63 | 4 | F03 | 9 | 10 | APS050 | 147 | 50 | 133 | 29,5 | 41,5 | 74 | 39 | 1,88 | 3P87150110 |
| 15 | G1/2 | 63 | 5 | F04 | 9 | 24 | APS050 | 147 | 55 | 134 | 29,5 | 41,5 | 74 | 40 | 1,94 | 3P87150115 |
| 20 | G3/4 | 63 | 8 | F04/F05 | 11 | 43 | APS050 | 147 | 70,5 | 138 | 29,5 | 41,5 | 74 | 44 | 2,32 | 3P87150120 |
| 25 | G1 | 63 | 10 | F04/F05 | 11 | 83 | APS050 | 147 | 83 | 140 | 29,5 | 41,5 | 74 | 46 | 2,52 | 3P87150125 |
| 32 | G1.1/4 | 63 | 14 | F05/F07 | 14 | 130 | APS060 | 168 | 91 | 164 | 36,0 | 47,0 | 88 | 56 | 4,09 | 3P87150130 |
| 40 | G1.1/2 | 63 | 22 | F05/F07 | 14 | 205 | APS070 | 184 | 103 | 182 | 41,5 | 53,0 | 100 | 62 | 5,36 | 3P87150135 |
| 50 | G2 | 63 | 30 | F05/F07 | 14 | 340 | APS080 | 204 | 120 | 199 | 45,0 | 56,0 | 109 | 70 | 7,17 | 3P87150140 |
| 65 | G2.1/2 | 63 | 36 | F07/F10 | 17 | 520 | APS090 | 262 | 155 | 250 | 52,0 | 55,0 | 120 | 110 | 14,25 | 3P87150145 |
| 80 | G3 | 63 | 60 | F07/F10 | 17 | 1100 | APS110 | 268 | 182 | 263 | 57,5 | 64,0 | 133 | 110 | 20,20 | 3P87150150 |
| 100 | G4 | 63 | 95 | F07/F10 | 17 | 1820 | APS130 | 301 | 225 | 295 | 70,0 | 71,0 | 155 | 120 | 32,35 | 3P87150155 |

## Single-acting ball valve with pipe threads, NO

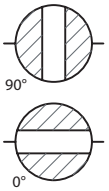


| Nominal[mm] connection[mm] | | max. press. [bar] | M(1) +30% [Nm] | Flange | Square | Kv [m3/h] | Pneumatic Actuator | Dimension [mm] and weight [kg] | | | | | | | | Order Code |
|---|---|---|---|---|---|---|---|---|---|---|---|---|---|---|---|---|
| DN | Rp | PN | | | | | | A | B | C | D | E | F | G | Weight | |
| 8 | G1/4 | 63 | 4 | F03 | 9 | 6 | APS050 | 147 | 50 | 133 | 29,5 | 41,5 | 74 | 39 | 1,89 | 3P87150205 |
| 10 | G3/8 | 63 | 4 | F03 | 9 | 10 | APS050 | 147 | 50 | 133 | 29,5 | 41,5 | 74 | 39 | 1,88 | 3P87150210 |
| 15 | G1/2 | 63 | 5 | F04 | 9 | 24 | APS050 | 147 | 55 | 134 | 29,5 | 41,5 | 74 | 40 | 1,94 | 3P87150215 |
| 20 | G3/4 | 63 | 8 | F04/F05 | 11 | 43 | APS050 | 147 | 70,5 | 138 | 29,5 | 41,5 | 74 | 44 | 2,32 | 3P87150220 |
| 25 | G1 | 63 | 10 | F04/F05 | 11 | 83 | APS050 | 147 | 83 | 140 | 29,5 | 41,5 | 74 | 46 | 2,52 | 3P87150225 |
| 32 | G1.1/4 | 63 | 14 | F05/F07 | 14 | 130 | APS060 | 168 | 91 | 164 | 36,0 | 47,0 | 88 | 56 | 4,09 | 3P87150230 |
| 40 | G1.1/2 | 63 | 22 | F05/F07 | 14 | 205 | APS070 | 184 | 103 | 182 | 41,5 | 53,0 | 100 | 62 | 5,36 | 3P87150235 |
| 50 | G2 | 63 | 30 | F05/F07 | 14 | 340 | APS080 | 204 | 120 | 199 | 45,0 | 56,0 | 109 | 70 | 7,17 | 3P87150240 |
| 65 | G2.1/2 | 63 | 36 | F07/F10 | 17 | 520 | APS090 | 262 | 155 | 250 | 52,0 | 55,0 | 120 | 110 | 14,25 | 3P87150245 |
| 80 | G3 | 63 | 60 | F07/F10 | 17 | 1100 | APS110 | 268 | 182 | 263 | 57,5 | 64,0 | 133 | 110 | 20,20 | 3P87150250 |
| 100 | G4 | 63 | 95 | F07/F10 | 17 | 1820 | APS130 | 301 | 225 | 295 | 70,0 | 71,0 | 155 | 120 | 32,35 | 3P87150255 |

© aim fluid control b.v. Wijzigingen voorbehouden. 2019-02-28

aim fluid control b.v. Ekkersrijt 7310 NL-5692 HH Son en Breugel
Telefoon: +31 (0)499 49 10 90 Fax: +31 (0)499 49 63 70
email: info@aimfluid.nl www.aimfluid.nl